Remote DMX/SDI 4-Port Gateway

The Pharos RIO G4 (Remote Gateway 4-Port Device) is a convenient and scalable solution, providing cost-effective Ethernet-distributed DMX ports. The RIO G4 is an easily configurable networking node that is specifically designed to add physical DMX ports to Pharos controllers. Compact plastic enclosure with installer-friendly connectors, DIN-rail mount and PoE for deployment where you need it, with four output ports. The gateway is discoverable through Pharos software and associated to a Pharos controller to be seamlessly configured as part of your patch. Ports can be flexibly assigned, providing an elegant data distribution solution over an Ethernet network with minimal setup required.

Supported in Pharos Designer 2.13 or later.
Supported in Pharos Express 2.0 or later.

RIO G4 Features

Isolation

The RIO G4 offers four DMX512 output ports to control your fixtures. Each port is independently galvanically isolated up to 2kV, ensuring the control circuitry and each port of the RIO G4 is protected against a multitude of electrical line faults, including earth potential rise and ground loops.

Protection

The RIO G4 is equipped with “self-healing” DMX ports, giving your equipment added protection from incorrect setup and energy surges, such as short circuits and power induction. Should an energy surge occur, it will be contained by the RIO, preventing it from flowing into other components; once the external fault is cleared, the ports “self-heal”, restoring DMX output automatically.

RDM Capable

When connected to Express Control or Designer LPC family controllers, the RIO G4 supports the Remote Device Management protocol (ANSI E1.20), allowing fixtures connected to any of the DMX512 outputs to communicate back to their respectively assigned Controller over an Ethernet network.

Scalable

Multiple Remote Devices can be combined on the same network to build the ideal system for your installation. System totals and maximum device limits depend on controller type.

SDI (Designer only)

Accessory for the RIO G4 supporting serial data protocol outputs for controlling products such as addressable LED tape.

Power-over-Ethernet

As a Power-over-Ethernet (PoE) device, the RIO G4 can be placed at any remote location and only needs a single Ethernet cable that provides both power and data.

Commissioning Software

Programmed and configured using Pharos software – available free for Windows or macOS – with upload over Ethernet.

Reliable

Solid-state design for 24/7 operation and reliability. Configurable hold last look option at 5Hz refresh, in the event of output data connection loss.

Installer Friendly

Made for permanent installation, with installer-friendly 0.200” (5.08mm) plug-in rising clamp terminals, a compact, plastic enclosure and easy DIN rail mounting. Includes a convenient thumb wheel for easy addressing and access to built-in DMX test programs.

Network

Works with any Pharos controller and links to it using standard protocols over an Ethernet network.

© 2004-2026 Pharos Architectural Controls Limited.
Specifications subject to change without notice.

Interfaces

Ethernet	RJ45 socket for 100Base-TX Ethernet with Link/Data LEDs; Static IP or DHCP; Power-over-Ethernet (PoE)
DMX	Four DMX512 ports (USITT E1.11-2008), RDM Compatible*

Protocols

DMX	DMX512 supports 512 channels output per port
RDM	Supports discovery and addressing via Pharos software (Excluding Designer VLC family)
UltraDMX	MY94441 supported natively (Designer only)
SPI	In SDI mode, supports serial data via the Pharos SDI (Designer only)

One output protocol per RIO G4

System Limits (Designer)

Remote Device system limit count includes all RIO, EDN, TPS and BPS in project.

In Project	Maximum 200 remote devices across multiple controllers in a single Pharos Designer project.
Per Controller	Maximum remote device limits assigned to controllers depend on controller type: 64 for each LPC, TPC 100 for each LPC X, VLC

System Limits (Express)

An Express system comprises one Express Control and optional devices.

In Project	Maximum four RIO G4 assigned to an Express Control.

Accessories (Designer only)

The SDI is an accessory to the RIO G4. This enables any Pharos controller to output via the RIO G4 + SDI a variety of serial protocols for controlling products such as addressable LED tape.

Both synchronous (SPI) and asynchronous serial lighting data are supported and these protocols allow for up to 1536 channels per port with supported cable lengths between the RIO G4 and SDI of up to 200m for asynchronous data and 40m for synchronous data.

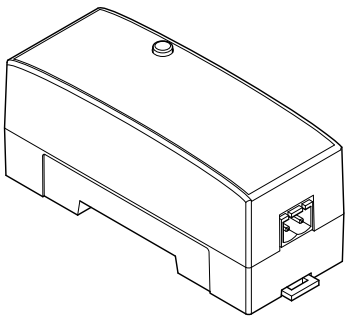

Specifications

Power	PoE (IEEE802.3af, Class 2), 7W max
Required	Any Pharos controller
Configuration	Pharos Designer 2.13 or later Pharos Express 2.0 or later
Addressing	By rotary selector switch
Temperature	0°C to 50°C (32°F to 122°F)
Humidity	10-90% relative, non-condensing
Ingress	IP40
Protection	Self-healing ports can withstand continuous AC voltage up to 300V or peak impulse voltage up to 650V with duration less than 10ms
Isolation	Ports independently galvanically-isolated up to 2kV
Physical	6 unit wide DIN rail mounting enclosure (35/7.5 rail) 10.8 x 9 x 4 cm (4.2 x 3.5 x 1.6 in) 0.2 kg (0.5 lbs)
Shipping	19.5 x 15 x 7.5 cm (8 x 6 x 3 in) 0.4 kg (0.9 lbs)
Recovery	Hardware watchdog and recessed reset button

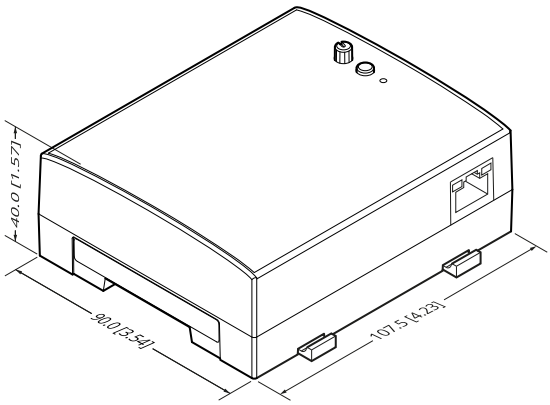

Order Code & Variants

RIO G4	Pharos Remote Gateway 4-Port Device (DMX/SDI x4)

Pharos controller required

Warranty & Certifications

Warranty	5 Years
Certifications	CE compliant, UKCA compliant, UL/cUL listed.

*Install-friendly 0.200" (5.08mm) plug in rising clamp connectors (included)

RIOG426002

© 2004-2026 Pharos Architectural Controls Limited.
Specifications subject to change without notice.