DATE	PROJECT	FIRM	TYPE

THE L50 INCLUDES PATENTED OPTICAL DESIGN THAT DELIVERS THE WIDEST RANGE OF BEAM ANGLE OPTIONS FOR PRECISE COVE, WALL GRAZING, WALL WASHING OR LINE OF LIGHT APPLICATIONS. EXCLUSIVE FLIP TO FLAT™ HINGE DESIGN PROVIDES FLEXIBILITY WHEN MANAGING SMALL COVE DETAILS. TROV OFFERS SMOOTH, FLICKER FREE DIMMING DOWN TO 0%.

FEATURES :

- DIM TO 0%, ELV REVERSE PHASE
- 24 BEAM ANGLES
- MULTI-VOLT
- FLIP TO FLAT™
- 6 CCT OPTIONS
- 80+ AND 90+ CRI OPTIONS
- IP54 INTERIOR AND IP66 EXTERIOR OPTIONS

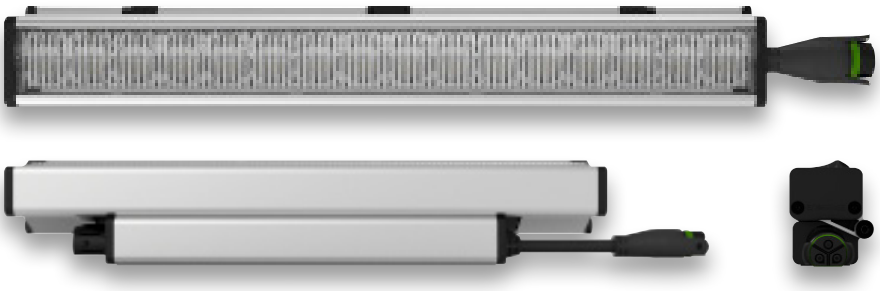

MODEL/ SIZE	INTERIOR/ EXTERIOR	LENGTH	POWER	CCT		CRI	VOLTAGE	OPTICS	
L50	I E	12″ 48″	02 04 06 08 10 12	**WHITE CCT** 22 27 30 35 40 50	**MONO COLOR** GR**** BL AM RD***	80 90* Blank For Color	MULT (120-277V)	**GRAZING** 9 x 9 9 x 17 9 x 29 9 x 59 15 x 15 15 x 23 15 x 35 15 x 65 **COVE** 120** Asym **LINE OF LIGHT** LOL	**WASHING** 25 x 25 25 x 33 25 x 45 25 x 75 39 x 9 55 x 25 40 x40 40 x 48 40 x 60 40 x 90 45 x 15 70 x 40 70 x 70

EXAMPLE: L50-I-48-10-27-90-MULT-15x65 *90 CRi not available in 2200K or 5000K **120 is only available with Exterior option. See L35 spec sheet for interior cove options. ***Red is not available in 12W or 10W. ****Green is not available in 12W.

PERFORMANCE	WATTS	OPTIC	LUMEN OUTPUT	EFFICACY
	2W	ASYM	110 lm/LF (361 lm/m)	55 lm/W
	4W	ASYM	302 lm/LF (1037 lm/m)	76 lm/W
	6W	ASYM	482 lm/LF (1614 lm/m)	80 lm/W
	8W	ASYM	675 lm/LF (2224 lm/m)	84 lm/W
	10W	ASYM	785 lm/LF (2644 lm/m)	79 lm/W
	12W	ASYM	923 lm/LF (2752 lm/m)	77 lm/W

ALL LUMEN DATA IS FROM 4000K 80CRI FIXTURES. PLEASE SEE PHOTOMETRY SPEC SHEET FOR ADDITIONAL LUMEN DATA.

COLOR RENDERING INDEX 80+, 90+

COLOR CONSISTENCY 2-STEP MACADAM ELLIPSE

LUMEN DEPRECIATION / RATED LIFE

WATTS	L70 @ 25C	L70 @ 50C	L90 @ 25C	L90 @ 50C
2W-12W	>150,000	>70,000	>50,000	>25,000

* CALCULATIONS FOR LED FIXTURES ARE BASED ON MEASUREMENTS THAT COMPLY WITH IES LM-80 TESTING PROCEDURES AND IES TM-21 CALCULATOR

ELECTRICAL

POWER CONSUMPTION 2W*/LF (6.6W/M) ; 4W/LF (13.2W/M) ; 6W/LF (19.8W/M) ; 8W/LF (26.4W/M) ; 10W/LF (33W/M) ; 12W/FL (39.6W/M)
* 3W/LF (9.9W/M) at 220V -277V

MAX FIXTURE RUN LENGTH

	2W/LF		4W/LF		6W/LF		8W/LF		10W/LF		12W/LF	
Volts	Max Run all 1'	Max Run all 4'	Max Run all 1'	Max Run all 4'	Max Run all 1'	Max Run all 4'	Max Run all 1'	Max Run all 4'	Max Run all 1'	Max Run all 4'	Max Run all 1'	Max Run all 4'
120	214	214	186	186	152	152	114	114	91	91	76	76
220	374	392	340	340	277	277	209	209	95	167	95	139
277	374	494	374	428	349	349	263	263	95	190	95	175

POWER FACTOR 4W, 6W, 8W, 10W, 12W >0.9, 2W<0.9

OPERATING VOLTAGE MULTIVOLT: 110-277VAC, 50/60 Hz

DRIVER INTEGRAL TO FIXTURE; DE-RATED POWER AND SYNCHRONOUS START-UP AT FULL BRIGHTNESS

STARTUP TEMPERATURE -40˚F TO 122˚F (-40˚C TO 50˚C)

OPERATING TEMPERATURE -40˚F TO 122˚F (-40˚C TO 50˚C)

STORAGE TEMPERATURE -40˚F TO 176˚F (-40˚C TO 80˚C)

ECOSENSE®

ECOSENSE LIGHTING INC.
837 NORTH SPRING STREET
SUITE 103
LOS ANGELES, CA 90012

P • 310.496.6255
F • 310.496.6256
T • 855.632.6736
855.6.ECOSEN

SPECIFICATIONS SUBJECT TO CHANGE WITHOUT NOTICE. VISIT **ECOSENSELIGHTING**.COM FOR THE MOST CURRENT SPECIFICATIONS.

© 2019 **ECOSENSE** LIGHTING INC. ALL RIGHTS RESERVED. **ECOSENSE**, THE **ECOSENSE** LOGO, **RISE**, **TROV**, **SLIM COVE** AND **ECOSPEC** ARE REGISTERED TRADEMARKS OF **ECOSENSE** LIGHTING INC.

FREEDOM TO CREATE™

DATE	PROJECT	FIRM	TYPE

CONTROL	**DIMMING**	110-277VAC, ELV TYPE 0.07%-100%, REVERSE PHASE, TRAILING EDGE ETC control systems require 0-10V control using EcoSense LDCM. TROV will not work with ETC phase dimmers.
PHYSICAL	**DIMENSIONS**	W 1.6" x H 2" x L 12"/48" ; (41.6mm x 50.5mm x 304.7mm/1201mm)
	HOUSING /LENS	EXTRUDED ALUMINUM; UV STABILIZED POLYCARBONATE; STAINLESS STEEL FASTENERS; PLASTIC ENDCAPS RUBBER OVERMOLD FOR CABLE ASSEMBLY
	WEIGHT	1.52LBS / 0.69KG (1FT) ; 4.95LBS / 2.25KG (4FT)
	CONNECTORS	INTEGRAL MALE/ FEMALE CONNECTORS
	ENVIRONMENT	INDOOR • ETL CERTIFIED FOR DRY/DAMP LOCATIONS IP54 OUTDOOR • ETL CERTIFIED FOR WET LOCATIONS IP66 IMPACT RATED TO IK10 Not intended to be used in water features such as waterfalls, fountains, etc.
	BEAM ANGLE	GRAZING, WASHING, COVE, ASYMMETRIC, LINE OF LIGHT
	MOUNTING OPTIONS	INTEGRAL MOUNTING AND ADJUSTABLE AIMING FROM 0˚-180˚ IN 15˚ INCREMENTS
FIXTURE RATING & CERTIFICATIONS	**CE, ETL CERTIFIED** **RoHS COMPLIANT** **ENERGY STAR COMPLIANT** **RCM CERTIFIED**	Title 24 JA8-2016 *90 CRI models only
LIMITED WARRANTY	**5 YEARS**	

WIRING OPTIONS (MVOLT): 110-277VAC

Power Cable Assembly, TROV, Leader/Jumper, 10 foot **CBL-3P-L-UNV-10***
Power Cable Assembly, TROV, Leader/Jumper, 50 foot **CBL-3P-L-UNV-50***
Power Cable Assembly, TROV, Jumper, 5 foot **CBL-3P-L-UNV-05****
Power Cable Assembly, TROV, Jumper, 1 foot **CBL-3P-L-UNV-01****
Power Cable Assembly, TROV, Adjustable Jumper, 0" to 7" **CBL-3P-L-UNV-ADJ**
Power Cable Assembly, TROV, Male and Female terminator caps **CBL-3P-L-UNV-CAPS**

*Two (2) terminators are included with the 10' and 50' power cable. One Leader need per circuit/fixture run. Cables are not plenum rated.
** If using the 5' or 1' power cable assembly as a leader to power a run one set of CBL-3P-L-UNV-CAPS will also be need per cable.

0-10V CONTROL OPTIONS

100-120VAC / 277VAC Linear Dimming Control Module 0-10V - Plenum Rated **LDCM-PL-120-277-010V-GR**

All products come standard with ELV dimming capabilities. 0-10V Control options required for operation at 0-10V.

OPTIONAL ACCESSORIES

Mounting

Mounting Track and Clips Set, 48 Inch Track, 8 Clips ..... **MNT-L-TRKCLIP-48** ..... 48" track and clips set will work with one 48" fixture or four 12" fixtures. (FOR INTERIOR USE ONLY)
Mounting Track and Clips Set, 12 Inch Track, 2 Clips ..... **MNT-L-TRKCLIP-12** ..... 12" track will not work with 48" fixtures. (FOR INTERIOR USE ONLY)
Mounting Track Clip, TROV, Set of 2 ..... **MNT-L-CLIP** ..... Clips needed = 12" fixtures need 1 set of 2 and 48" fixture needs 2 sets of 2.
90 Degree L bracket, TROV, Set of 2 ..... **MNT-L-LBKT** ..... L-Brackets needed = 12" fixtures need 1 set of 2 and 48" fixture needs 1 set of 2.
Angle Locking Clip, TROV, Pack of 10 ..... **MNT-L-ANGLOCK** ..... Angle Locks needed = 12" fixtures need 1 and 48" fixtures need 2. (Must order separately)
Mounting, Fine Adjustment Bracket, TROV ..... **MNT-L-FAB** ..... Fine Adjustment Brackets needed = 12" fixtures need 1 and 48" fixtures need 2.
*Fine Adjustment Bracket is highly recommended for Grazing Optics.
Mounting, Fine Adjustment L-Bracket, TROV ..... **MNT-L-LFAB** ..... Fine Adjustment L-Brackets needed = 12" fixtures need 1 and 48" fixtures need 2.
*Fine Adjustment L-Bracket is recommended for Asymetric Optics when aiming is needed.

Wall Mount Arm

Wall Mount Arm, 6 inch, TROV **WMA-L-CA-06**
Wall Mount Arm, 12 inch, TROV **WMA-L-CA-12**
Wall Mount Arm, 18 inch, TROV **WMA-L-CA-18**
Wall Mount Arm, 24 inch, TROV **WMA-L-CA-24**
Wall Mount Arm End Plate Set, TROV, Includes Left and Right ..... **WMA-L-END**
Wall Mount Arm Joiner Plate, TROV ..... **WMA-L-JNR**

Wall Mount Arms needed = For individual fixture installations two arms and one end set will be needed per fixture. For continuous run installation one endset will be needed per run. Each end set contains one left and one right end plate. One joining set wll be needed per joint. One arm per fixture will be need plus one extra arm to complete the run. For example: A 10ft run made with two 4ft and two 1ft fixtures will contain; 1 x WMA-L-END, 3 x WMA-L-JNR, and 5 x WMA-L-CA-12. Leader cables are not included with wall mount arms, end sets, or joiners sets.

Masking Plates

Masking Plate, 3 inch high, 12 inch, L50 & L35 ..... **MP-L50-3H-12**
Masking Plate, 3 inch high, 48 inch, L50 & L35 ..... **MP-L50-3H-48**

Masking Plates needed = One 12" plate is needed per 12" fixture and one 48" plate is needed per 48" fixture.

Landscape Stake

Landscape Stake, 6 inch, TROV, Set of 2 ..... **LS-L-STK-06**
Landscape Stake, 12 inch, TROV, Set of 2 ..... **LS-L-STK-12**
Landscape Stake, 18 inch, TROV, Set of 2 ..... **LS-L-STK-18**

Landscape Stakes needed = 12" and 48" fixtures both need one set of 2.

Wire Box

Conduit Connection, Wire Box, TROV, Interior Only, L50 ..... **CC-L-WIREBOX**

Wire box can be used instead of a leader cable to start a run. 1/2" conduit fitting can attach directly to the box on one end and the fixture to the other.

ECOSENSE LIGHTING INC.
837 NORTH SPRING STREET
SUITE 103
LOS ANGELES, CA 90012

P • 310.496.6255
F • 310.496.6256
T • 855.632.6736
855.6.ECOSEN

SPECIFICATIONS SUBJECT TO CHANGE WITHOUT NOTICE. VISIT **ECOSENSELIGHTING**.COM FOR THE MOST CURRENT SPECIFICATIONS.

© 2019 **ECOSENSE** LIGHTING INC. ALL RIGHTS RESERVED. **ECOSENSE**, THE **ECOSENSE** LOGO, **RISE**, **TROV**, **SLIM COVE** AND **ECOSPEC** ARE REGISTERED TRADEMARKS OF **ECOSENSE** LIGHTING INC.

FREEDOM TO CREATE™

DATE	PROJECT	FIRM	TYPE

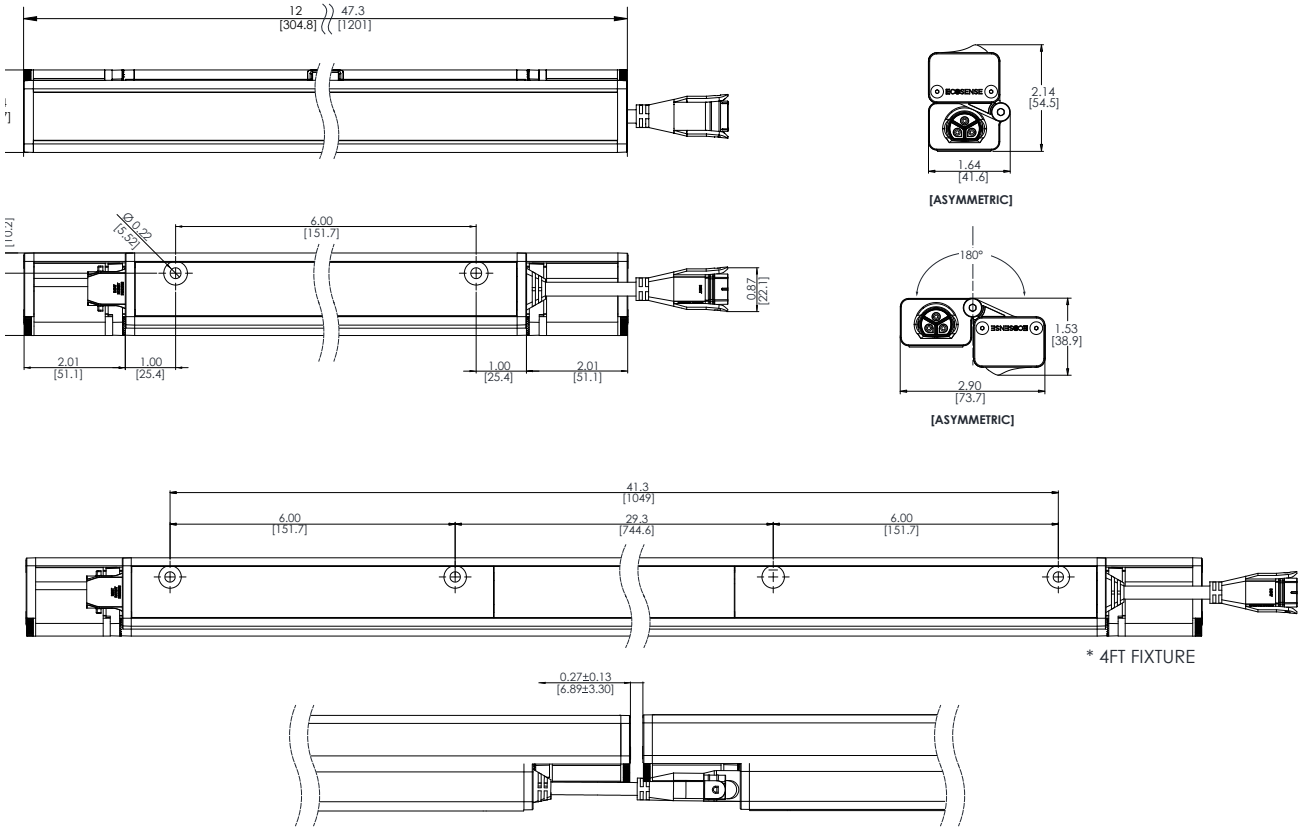

Fine Adjustable L-Bracket:

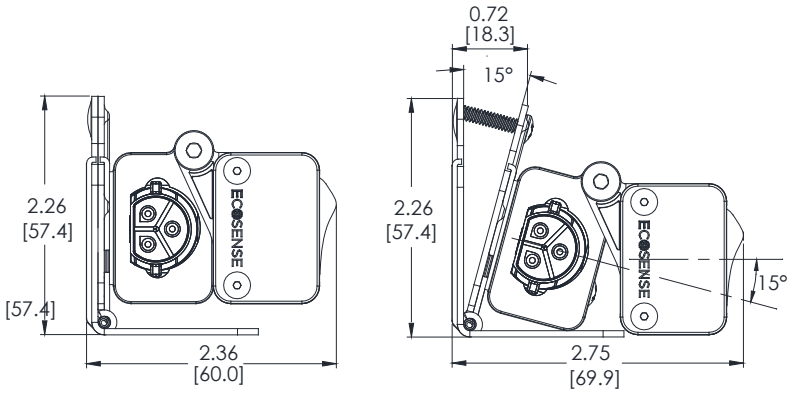

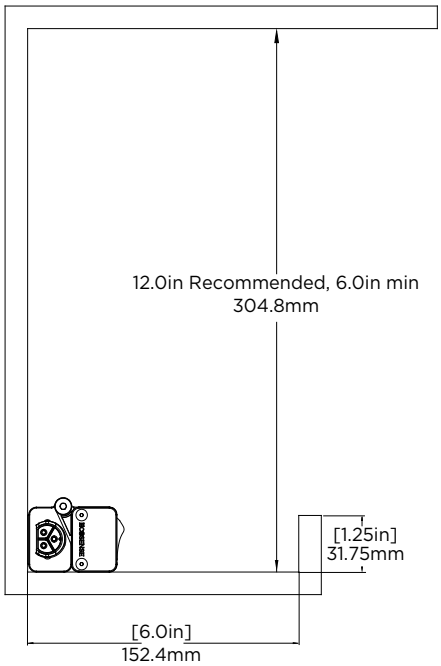

ECOSENSE®

ECOSENSE LIGHTING INC.
837 NORTH SPRING STREET
SUITE 103
LOS ANGELES, CA 90012

P • 310.496.6255
F • 310.496.6256
T • 855.632.6736
855.6.ECOSEN

SPECIFICATIONS SUBJECT TO CHANGE WITHOUT NOTICE. VISIT **ECOSENSELIGHTING**.COM FOR THE MOST CURRENT SPECIFICATIONS.

© 2019 **ECOSENSE** LIGHTING INC. ALL RIGHTS RESERVED. **ECOSENSE**, THE **ECOSENSE** LOGO, **RISE**, **TROV**, **SLIM COVE** AND **ECOSPEC** ARE REGISTERED TRADEMARKS OF **ECOSENSE** LIGHTING INC.

FREEDOM TO CREATE™