eldoLED
your product | *our drive*

Application note — Interconnecting VDC- of networked DC drivers

eldoLED drivers to which this application note applies include:

12-48VDC LED drivers

ECOdrive DC 15D, 30D, 45D
POWERdrive DC 45D, 90D, 180D*
LINEARdrive 100D, 180D, 212D, 222D

*when only DMX IN connectors are used

With several power supply units in a DMX network, the possibility exists that their absolute VDC- values differ from one another. Within the eldoLED DC drivers, the DMX shield is connected to VDC- through a 100Ohm resistor. So if fluctuations occur in the ground of the various power supply units, this creates fluctuations in DMX shield, possibly resulting in random flicker in the light output.

This application note describes how to interconnect the VDC- wiring of both the LED drivers' and DMX controller's power supply units in order to prevent random flicker in the light output.

Application

The diagram below illustrates a sample application in which several LINEARdrive 180Ds are part of a bussed DMX network. Each LINEARdrive and its LEDs are powered by a separate power supply unit, and the DMX controller has a separate power supply unit as well.

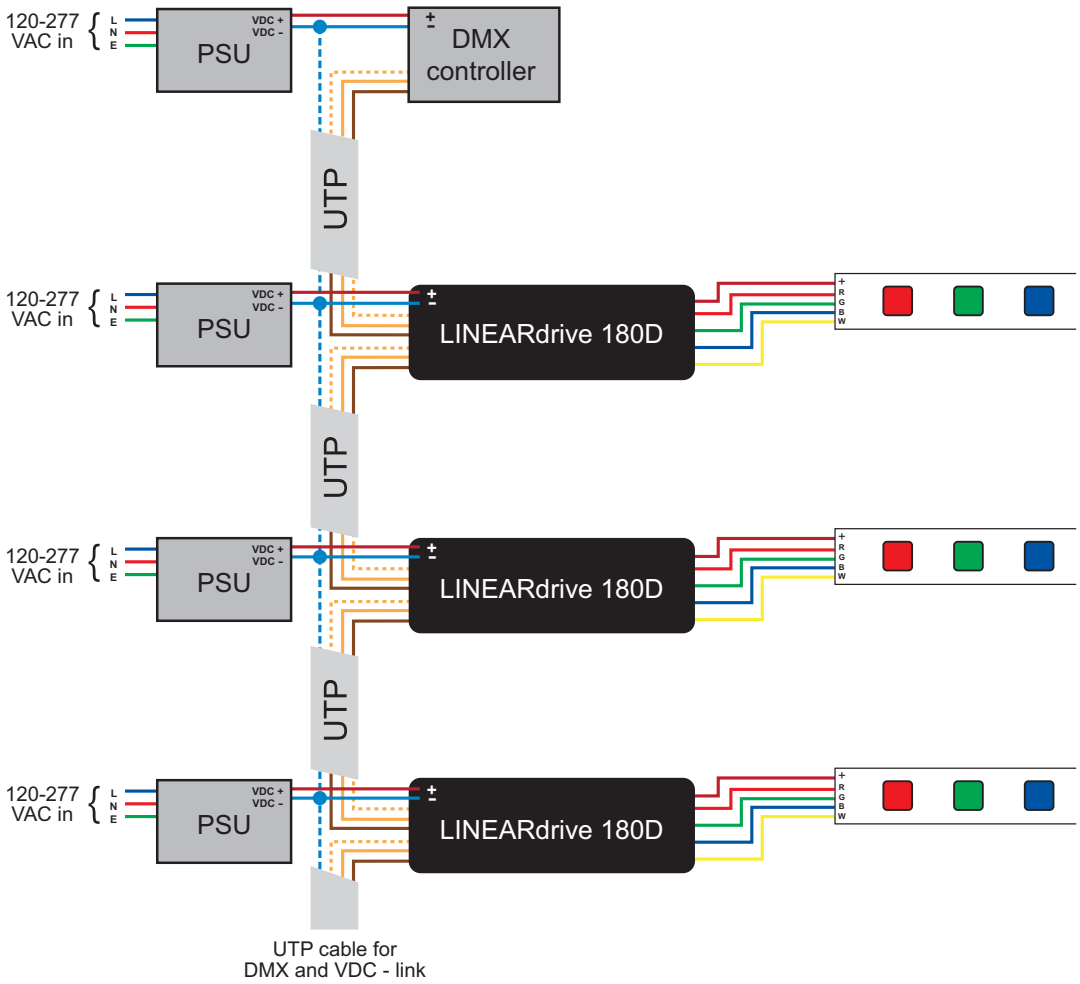

Bussed network of several LINEARdrive 180D drivers

© 2016 eldoLED. All rights reserved. V1.1

Wiring diagram

A CAT5 Unshielded Twisted Pair (UTP) cable is used for the DMX and VDC- connections:

- orange-white wire: DMX in +
- orange wire: DMX in -
- brown wire: DMX in shield
- blue-white wire: VDC-

The close-up below shows how the VDC+ of the LED driver's power supply unit is directly connected to the LED driver's VDC+ connector.

The VDC- of the LED driver's power supply unit, however, is connected to the UTP cable's blue-white wire, to which the DMX controller's power supply is connected as well.

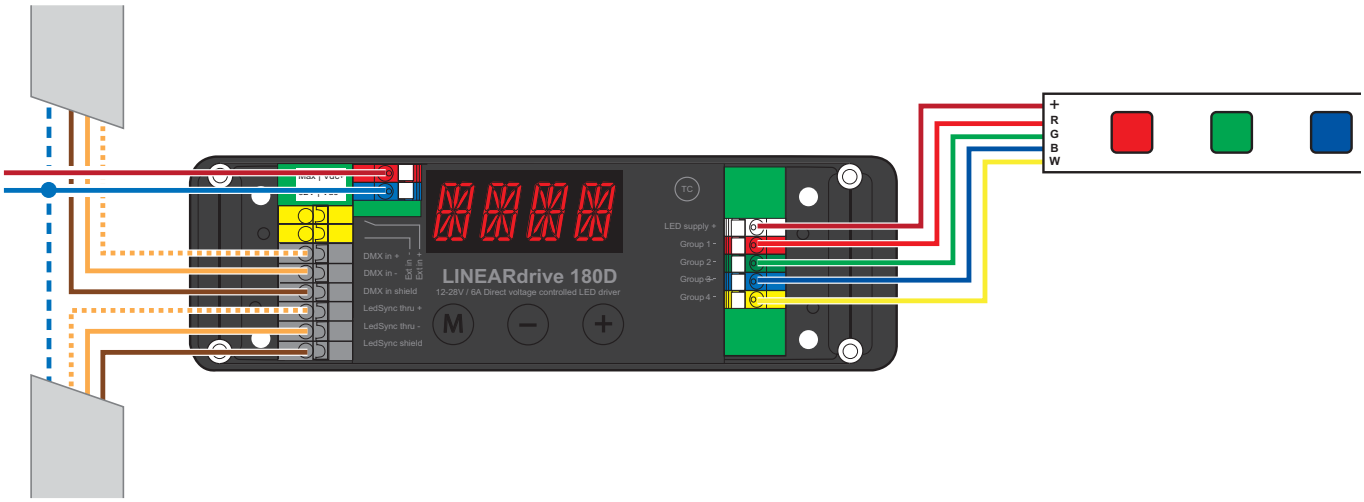

Close-up of DMX and VDC wiring of LINEARdrive 180D driver

Europe, Rest of World
eldoLED B.V.
Science Park Eindhoven 5125
NL-5692 ED Son
The Netherlands
T: +31 40 7820400

North America
eldoLED America
One Lithonia Way
Conyers, GA 30012
USA
T: +1 877 353-6533

Sales support US/Canada: nasales@eldoled.com
Sales support Rest of the World: sales@eldoled.com
,

Warranty, documentation and support

eldoLED represents and warrants that for a period of 3 (three) years, as of the date of invoice, Products materially meet the specifications and specifically agreed upon quality, both as stated in the applicable data-sheet and/or written design-in specifications, or as stated in writing otherwise by eldoLED, provided that these specifications are explicitly designated by eldoLED as "warranted specifications".

For the complete warranty text, and other documentation such as quick start guides, wiring diagrams, tech sheets and 3D IGES files, visit www.eldoled.com.

© 2016 eldoLED. All rights reserved. V1.1